Project C2: Magnetic control in Ribbon Growth on Substrate of silicon wafers

Helmholtz-Alliance LIMTECH: Kick-Off Meeting

V. Galindo[a)], A.Schönecker[b)]

[a)] *Helmholtz-Zentrum Dresden-Rossendorf*
[b)] *RGS Development B.V.*

November 20, 2012

HZDR

HELMHOLTZ
ZENTRUM DRESDEN
ROSSENDORF

Helmholtz-Alliance LIMTECH

C2: Magnetic control in Ribbon Growth on Substrate of silicon wafers (HZDR, RGS)

PI: Vladimir Galindo (HZDR)

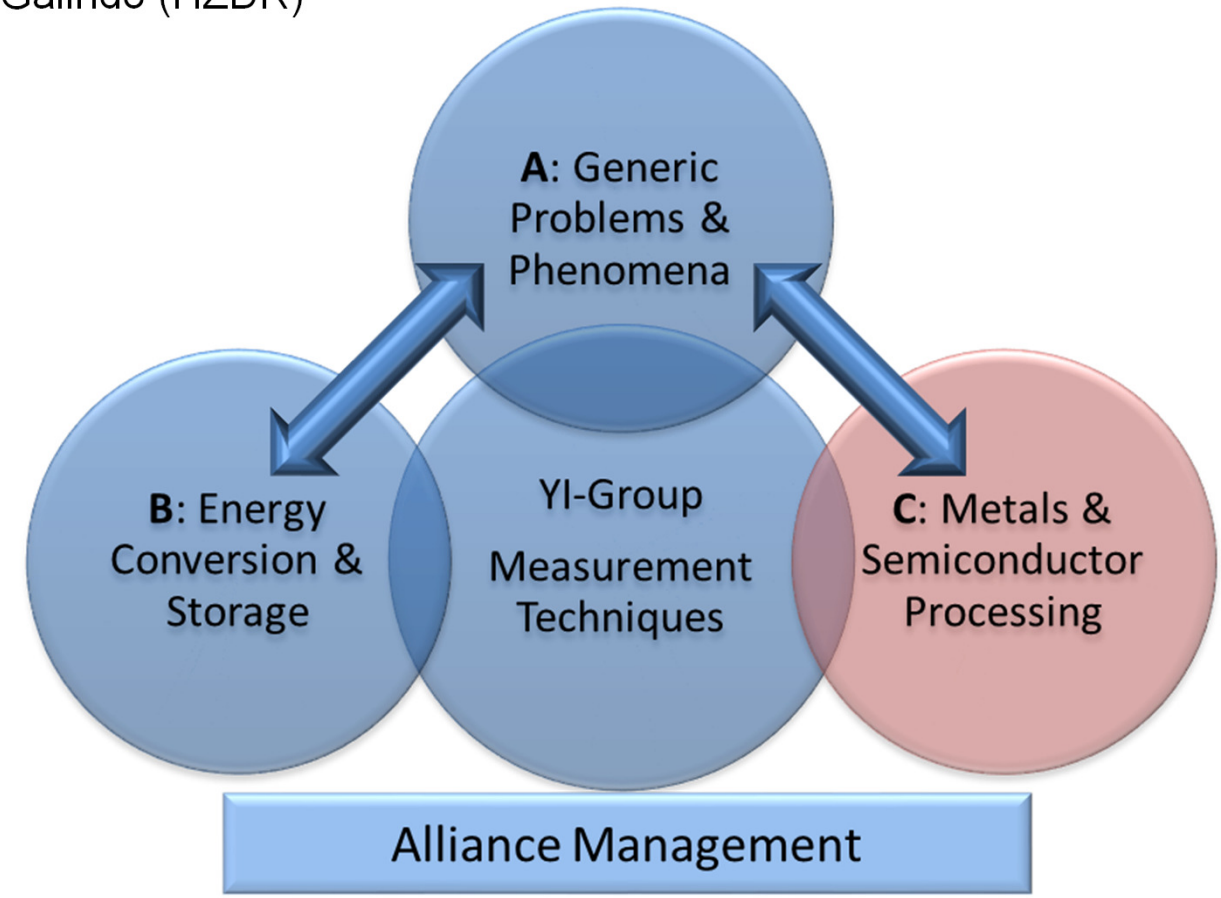

http://www.hzdr.de/LIMTECH

C2: Magnetic control in ribbon growth on substrate of silicon wafers (HZDR, RGS)

Solidification or Cz: sawing losses (40...60%) during wafer production!

Search for a technology without sawing losses:

Ribbon Growth on Substrate (RGS) - Technology

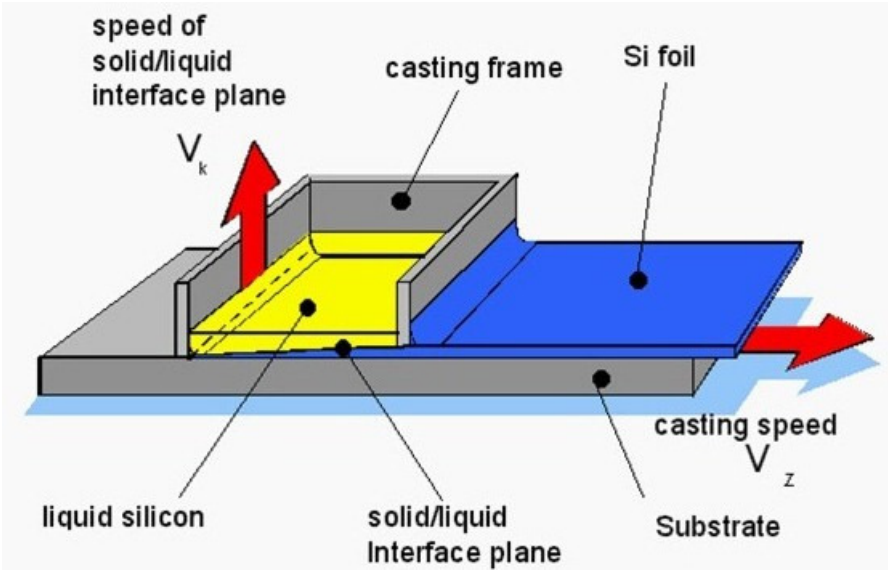

Si thickness adjustable and variable (100…300 µm)

RGS Development B.V. Broek op Langedijk (The Netherlands)

RGS development B.V.
Photovoltaic Silicon Wafer Technology

HZDR

C2: Magnetic control in ribbon growth on substrate of silicon wafers (HZDR, RGS)

Ribbon Growth on Substrate (RGS) – Silicon Wafer Technology

RGS Development B.V. Broek op Langedijk (The Netherlands)
Dr. Axel Schönecker

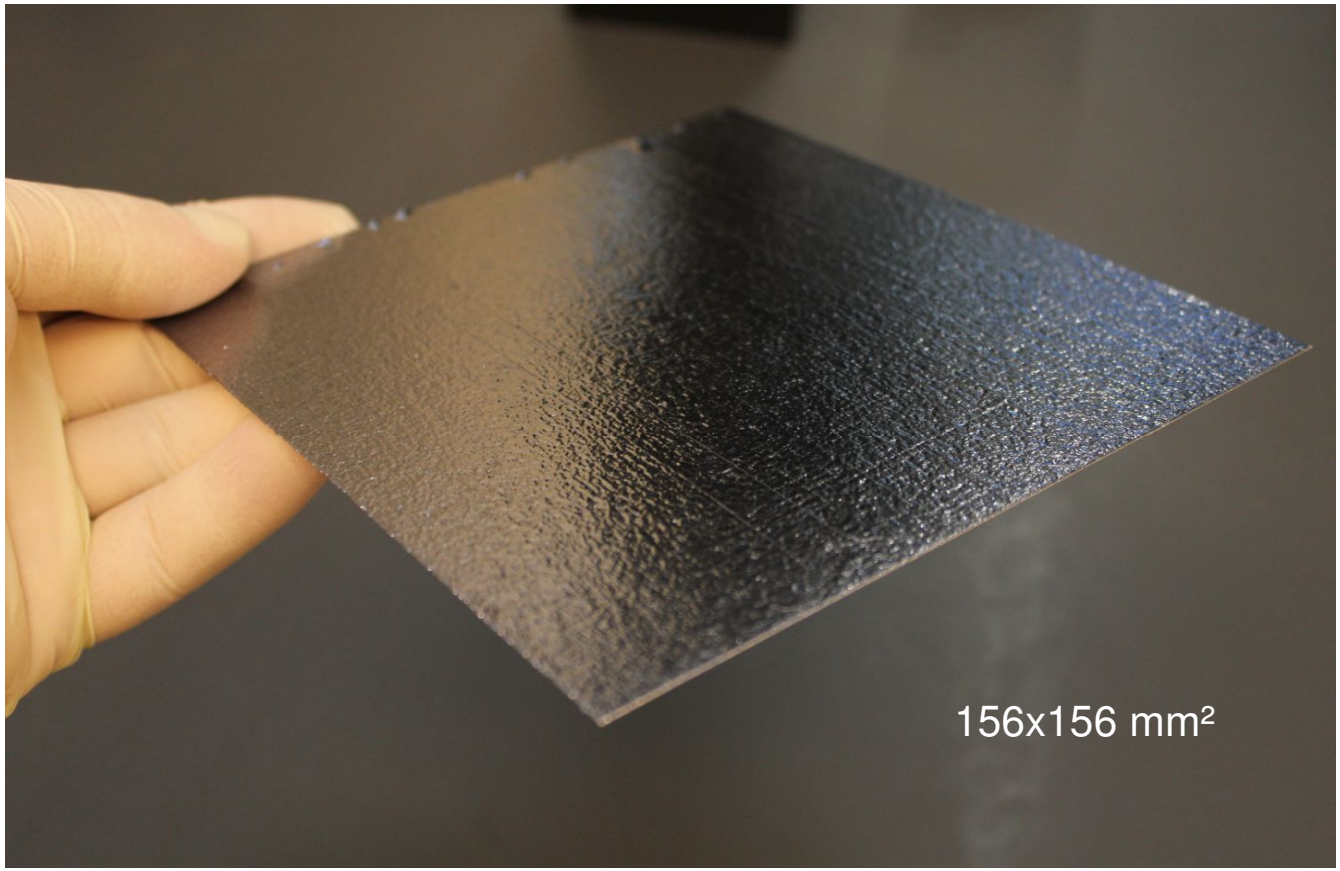

RGS development B.V.
Photovoltaic Silicon Wafer Technology

HZDR

C2: Magnetic control in ribbon growth on substrate of silicon wafers (HZDR, RGS)

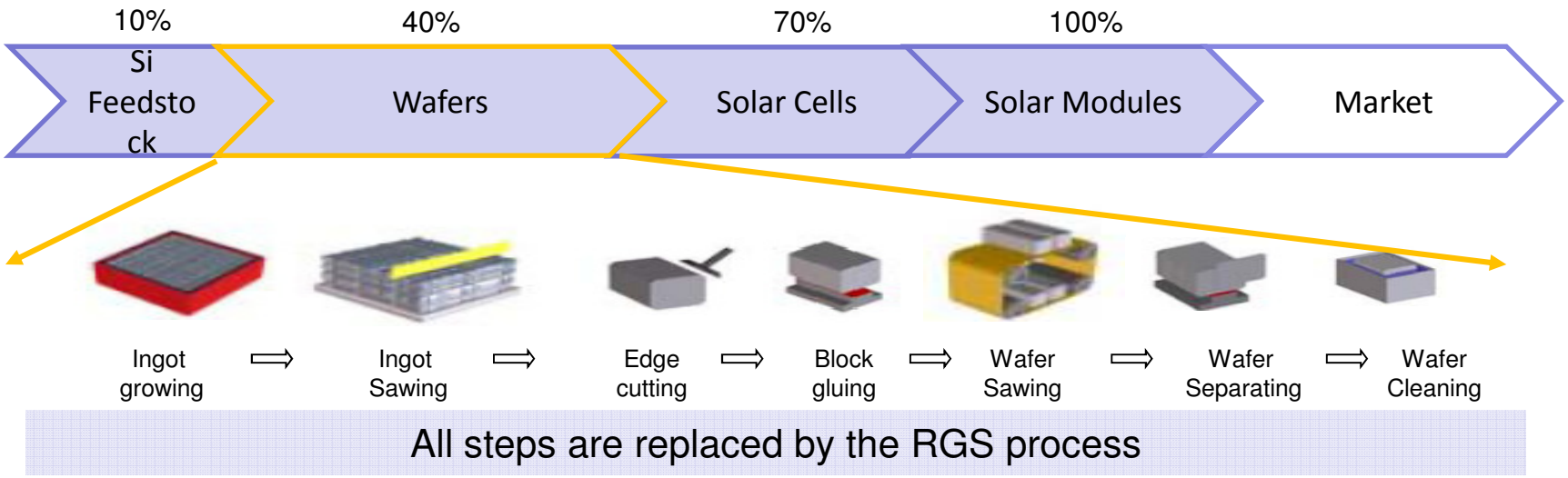

Technical **advantages** of RGS technology compared to the state of the art, i.e. block crystallization and wafer cutting technology:

- Silicon material yield is increased from about 40% to more than 90%.
- Wafer cutting and cleaning steps are avoided.
- Throughput per machine is increased from today's 2-10 MWp annual output to 50 MWp wafer equivalent with good possibilities for further up-scaling.
- RGS silicon wafers are compatible with the currently available cut wafers and can therefore be processed to solar cells in standard solar cell manufacturing lines.

RGS development B.V.
Photovoltaic Silicon Wafer Technology
HZDR

C2: Magnetic control in ribbon growth on substrate of silicon wafers (HZDR, RGS)

Cross section of laboratory equipment

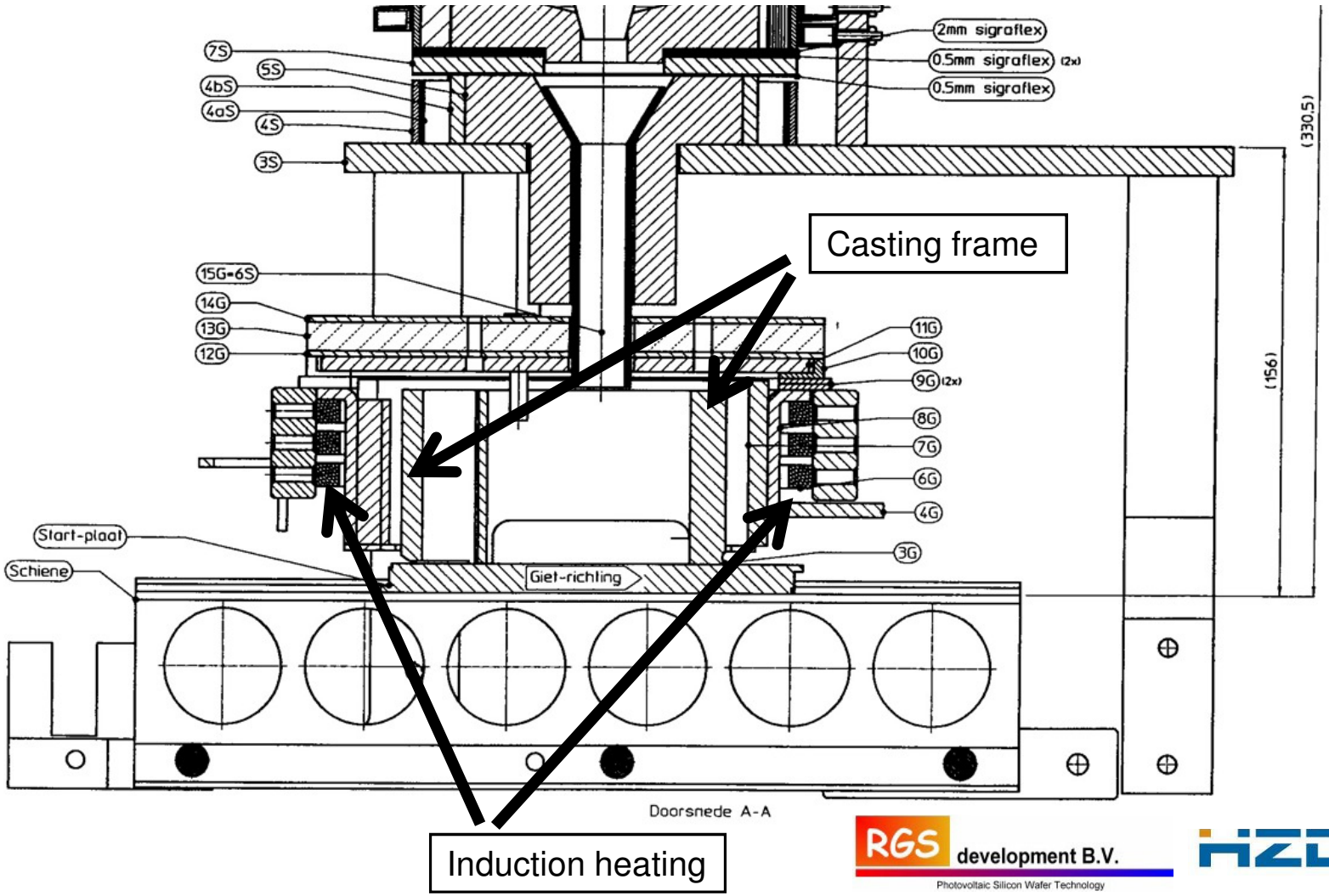

RGS development B.V.
Photovoltaic Silicon Wafer Technology

HZDR

C2: Magnetic control in ribbon growth on substrate of silicon wafers (HZDR, RGS)

Liquid silicon flow in the casting frame

3 areas of interest for liquid silicon flow control:

- Initial contact between liquid silicon and substrate
- Melt flow at solidification front (liquid – solid interface)
- Liquid silicon drag out

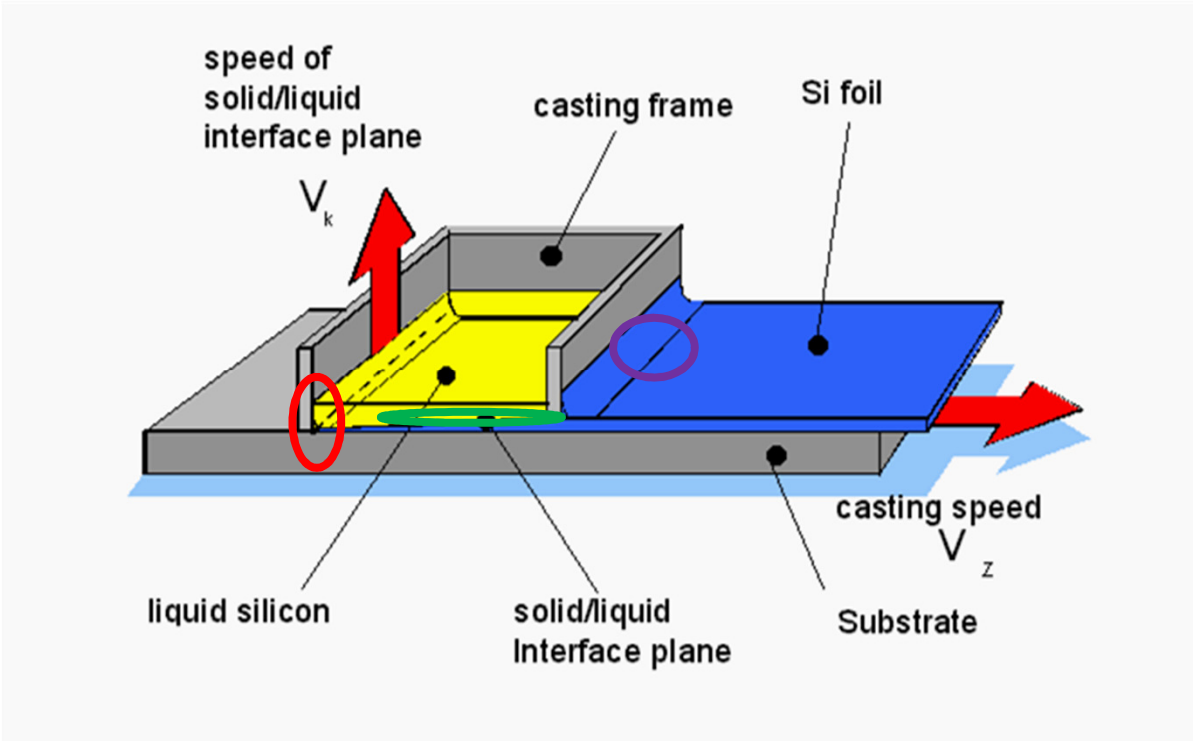

RGS development B.V.
Photovoltaic Silicon Wafer Technology

HZDR

C2: Magnetic control in ribbon growth on substrate of silicon wafers (HZDR, RGS)

Initial substrate silicon contact

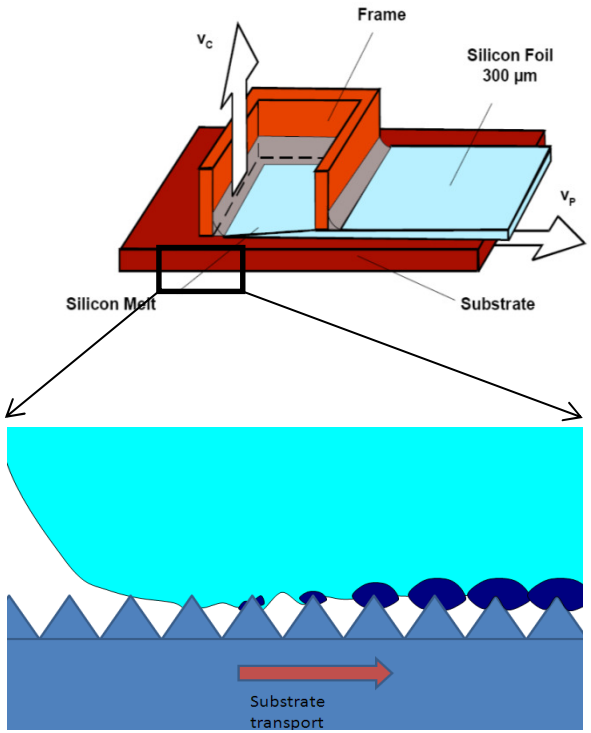

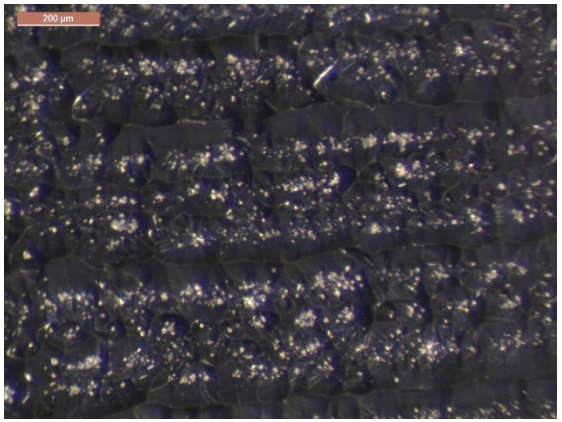

Optical microscope image of wafer – substrate surface (dark field)

$Si_{(sol)}$

Substrate

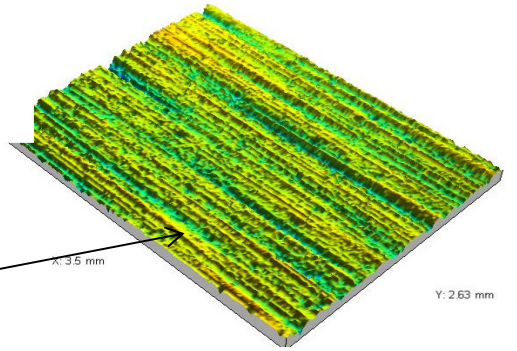

3D plot of a substrate surface (confocal microscope data)

- Silicon contacts only the top of the rugosity peaks.
- To understand contact point formation, Si flow and Lorentz forces in this area must be known.
- Contact point formation is the critical parameter for further crystal growth.

RGS development B.V.
Photovoltaic Silicon Wafer Technology
HZDR

C2: Magnetic control in ribbon growth on substrate of silicon wafers (HZDR, RGS)

Melt flow at solidification front

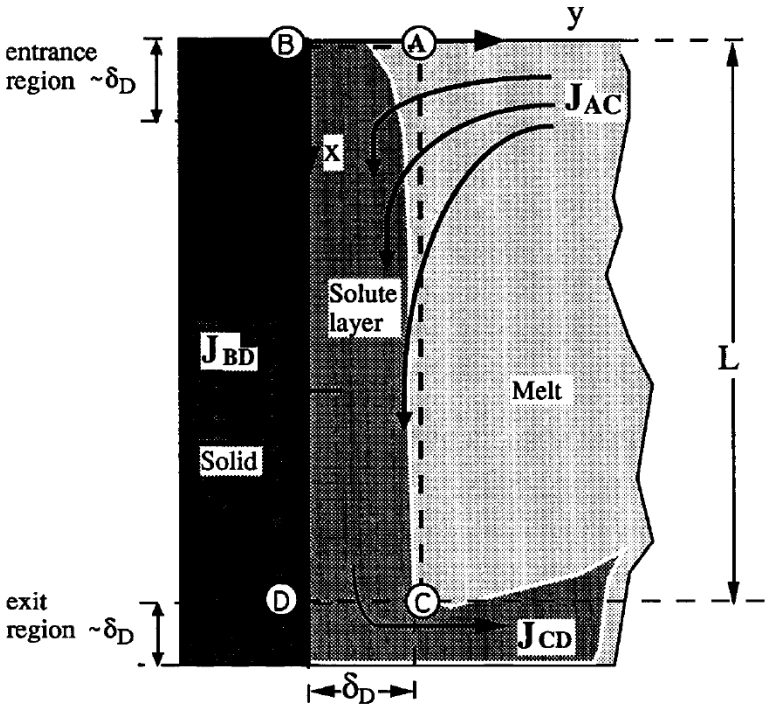

Fig. 2. Sketch of the geometry and the control volume (ABCD) used for the model.

- Segregation of impurities plays an important role for the wafer quality.
- Liquid silicon flow determines the impurity concentration in the diffusion layer in front of the crystallization front and thus the impurity level in the wafer

RGS development B.V. Photovoltaic Silicon Wafer Technology

HZDR

C2: Magnetic control in ribbon growth on substrate of silicon wafers (HZDR, RGS)

Liquid silicon drag out

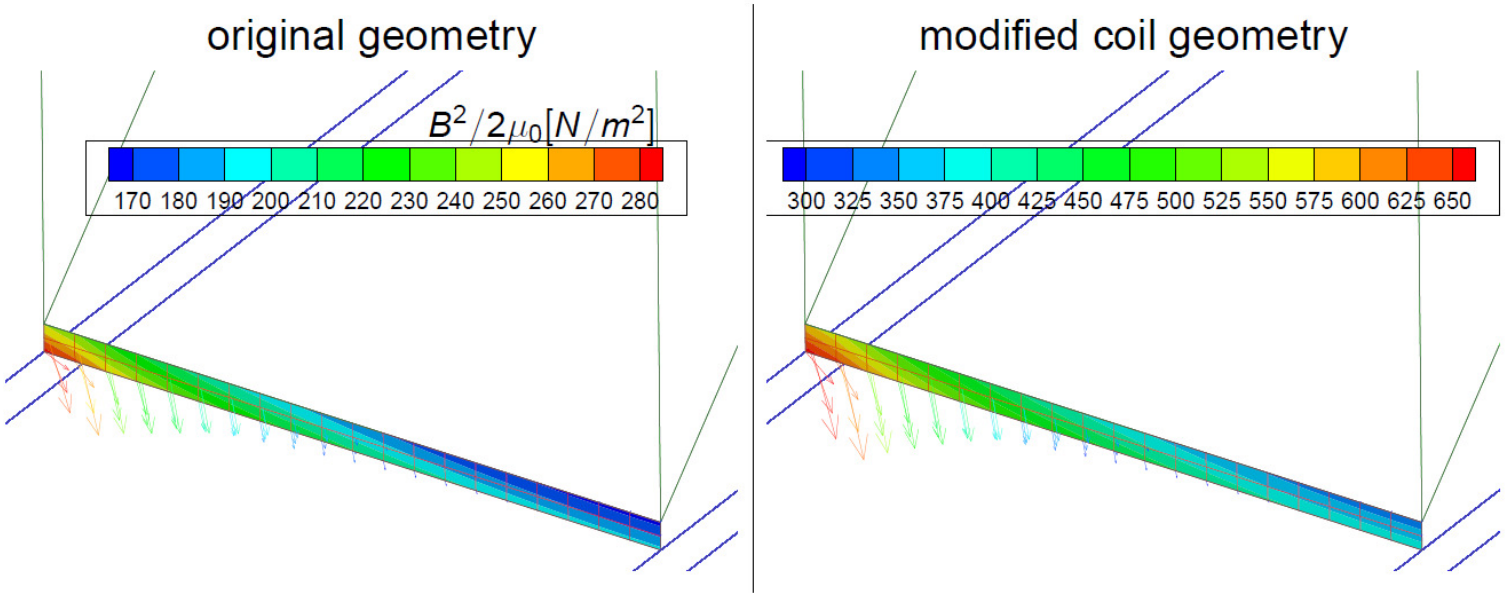

Induced magnetic pressure and induced electromagnetic force density in the slit

Hydrostatic pressure $\rho gh \approx 250 M/m^2$ (Si melt level inside the frame: *10 cm*)

- Liquid silicon drag from the casting frame can be suppressed by em forces.
- This has been implemented in the RGS process as a result of a successful project together with the HZDR

RGS development B.V. Photovoltaic Silicon Wafer Technology

HZDR

C2: Magnetic control in ribbon growth on substrate of silicon wafers (HZDR, RGS)

Problem: Instabilities at the open slits of the casting frame

Solution: electromagnetic valve realized by some induction heater
em-valve only possible if surface tension helps, i.e. thin slits

Project activities:

- Numerical simulations of the em-fields and resulting em pressure
- model experiment with velocity and pressure measurements:
  demonstration of the em-valve action depending on slit size
- full em simulation: frequency shifts depending on melt height in casting frame
- feasibility of CIFT measurements in the industrial process

Links: A3, A4, A5, B5, YIG

RGS development B.V.
Photovoltaic Silicon Wafer Technology

HZDR

C2: Magnetic control in ribbon growth on substrate of silicon wafers (HZDR, RGS)

Thank you

for your attention!

RGS development B.V.
Photovoltaic Silicon Wafer Technology

HZDR