A CAMAC-Based Data Acquisition System for Photoactivation Experiments at the Electron Accelerator ELBE

M. FAUTH[1], P. CRESPO, M. ERHARD, A.R. JUNGHANS, C. NAIR, K.D. SCHILLING, A. WAGNER

A CAMAC-based data acquisition system named CAP (for CAMAC Acquisition through PCI) has been developed for photo-activation experiments at ELBE using high-purity germanium-detectors. The system enables to handle rapidly changing detector count rates from decaying radioactivities with strongly varying data-acquisition dead-times and detector pile-up by using list-mode data taking.

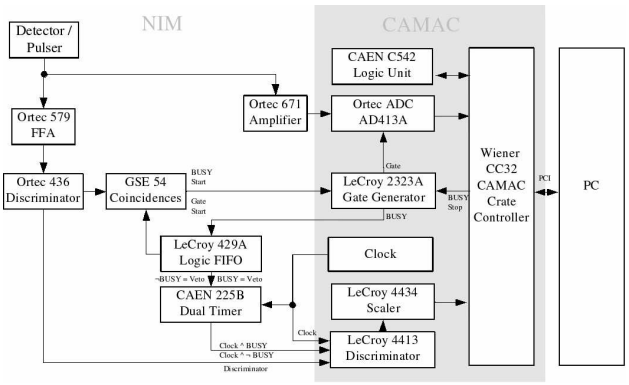

Fig. 1 *Electronics scheme of the CAP system.*

Fig. 1 shows the electronics chain implemented with CAP. The detector's preamplifier signal arrives at an ORTEC[2] 671 main amplifier and an ORTEC 479 fast filter amplifier.

The main amplifier provides a Gaussian-shaped signal for an ORTEC AD413 13-bit analog-to-digital converter read out by CAMAC through a WIENER[3] CAMAC to PCI computer interface. The fast filter amplifier produces a fast rise-time signal with 200 ns differentiation time which is fed into a discriminator. The discriminator signals are counted directly and gated by the data-acquisition dead-time logic using a fast LeCroy[4] 4434 scaler. The gated discriminator signal provides the ADC gate, as well. In parallel, a 1 MHz clock signal is processed in the same way which allows for a precise determination of the data taking time and an independent determination of the dead-time (and detector pile-up) correction. Fig. 2 shows the electronic timing diagram of the CAP system.

The software routines developed for CAP and the list-mode data-format are based on the routines developed for the data acquisition CAGE [1] (CAMAC Acquisition through GPIB and Ethernet). The system performance was analyzed using the decay of activated Sm_2O_3 samples where the various isotopes decay with significantly different half-lives. The plot in Fig. 3 shows three different decay curves for the full energy spectrum, the 103 keV transition from $^{154}Sm(\gamma,n)^{153}Sm(\beta^-)^{153}Eu$ with a half-live of 46.3 h, and the 1057 keV transition from $^{144}Sm(\gamma,n)^{143}Sm(\beta^+)^{143}Pm$ with a half-live of 8.83 min. We conclude that radioactivity from short-lived nuclei can be quantified even for strongly varying detector count rates.

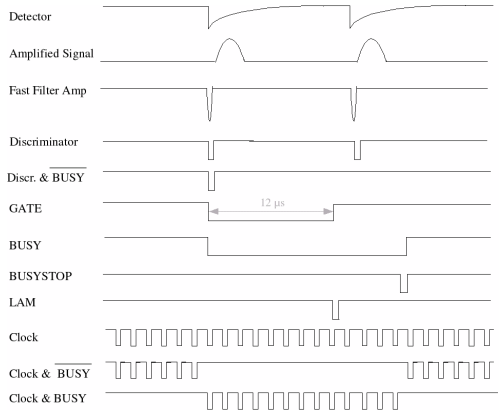

Fig. 2 *Electronic timing diagram of the CAP system.*

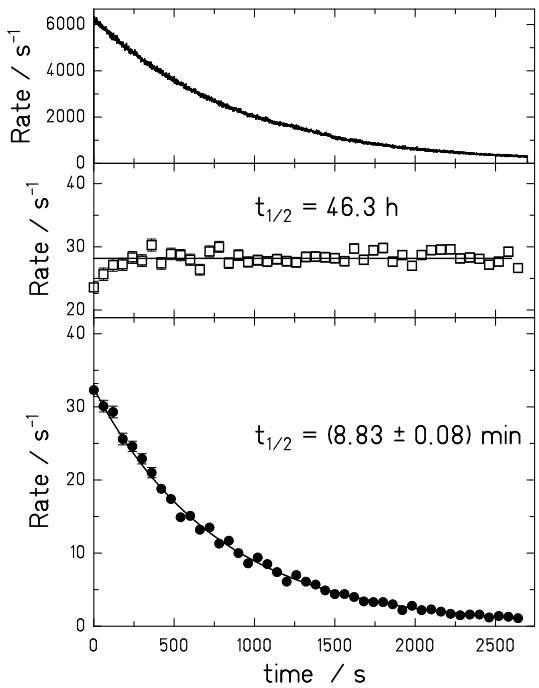

Fig. 3 *Data acquisition rate, rate of detected decays from* ^{153}Sm, *and rate of detected decays from* ^{143}Sm.

[1] http://www.fzd.de/FWK/MITARB/crespo/cage.html

[1] *also TU Dresden*
[2] *ORTEC Inc., Oak Ridge, TN 37830 U.S.A.*
[3] *WIENER, Plein & Baus GmbH, 51399 Burscheid, Germany*
[4] *LeCroy Corp., Chestnut Ridge, NY 10977 U.S.A.*