SCALING EFFECTS OF THE TWO-PHASE FLOW IN VERTICAL PIPES - NEW RESULTS OF TOPFLOW

Horst-Michael Prasser, Matthias Beyer, Helmar Carl, and Peter Schütz

Introduction

In autumn 2002 the Institute of Safety Research of Forschungszentrum Rossendorf e.V. has commissioned the new thermal-fluiddynamic test facility TOPFLOW. The first tests carried out in a vertical pipe of 194.1 mm diameter have shown that a region of well-organized slug flow is no more observed in pipes of such large diameters [1]. This confirms the findings of Ohnuki [2], who reported, that slug flow which is established in small pipes, is not found in larger pipes. In the meanwhile, more experiments were carried out at the TOPFLOW facility. Special attention was paid to the influence of the gas injection. The primary bubble size has a deciding influence on the appearance of the wall peak in the radial void fraction profiles. The present paper gives an overview on experiments which were dedicated to this phenomenon.

Test section DN 200

The test pipe has an inner diameter of 194.1 mm and a total height of 9 m. Close to the lower end a gas injector is located (Fig. 1). A tube is bend into the main flow direction, forming a coaxial segment. A gas injection head is screwed on top of this tube. In order to study the influence of the primary bubble size, two different gas injection heads were used in the experiments described here. Gas injection head A (Fig. 2) has a perforation consisting of three rings, each with 20 orifices of 6 mm diameter. Above the perforated region there is a conical part in order to reduce the formation of vortices due to flow separation effects.

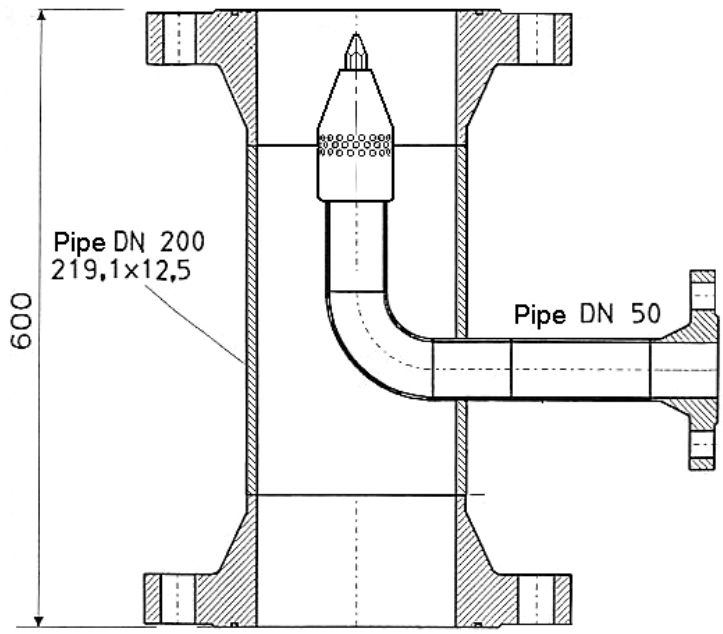

Fig. 1: Gas injection device in the DN200 test pipe

The second injection head B is shown in Fig. 3. Instead of the large orifices directly drilled into the wall of the head, 16 small steel tubes with gas injection orifices of 0.8 mm diameter are radially welded to the gas injection head. The total number of orifices is 152. Each second radial tube has 12 orifices, the other half of the tubes has 7 orifices each.

Two wire-mesh sensors were used for the measurements, each comprising a matrix of 64x64 measuring points that are scanned at 2500 Hz (Fig. 4). The large number of electrode wires allows to achieve a resolution of 3 mm in the entire cross section. The sensor is mounted into a flange connection 1000 mm below the upper end of the test section. The distance between gas injection and the measuring plane of the wire-mesh sensor was L_{wms} = 7660 mm.

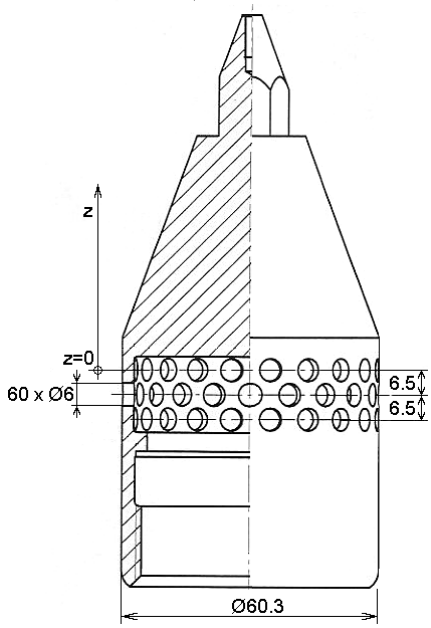

Fig. 2: Gas injection head type A

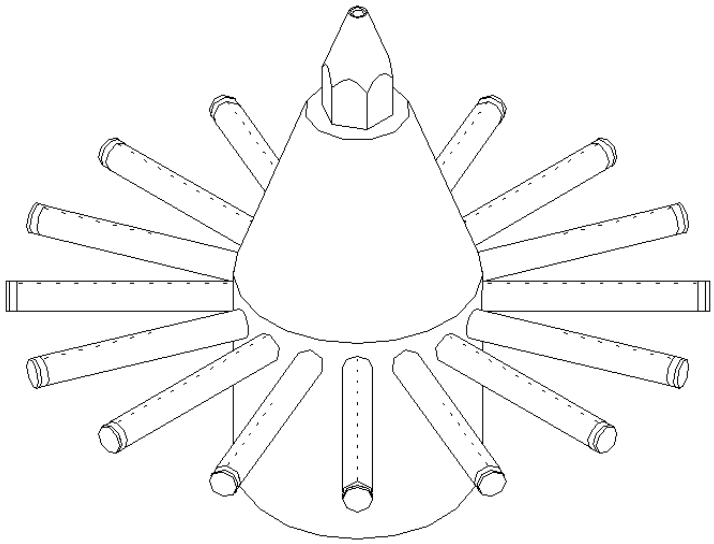

Fig. 3: Gas injection head type B

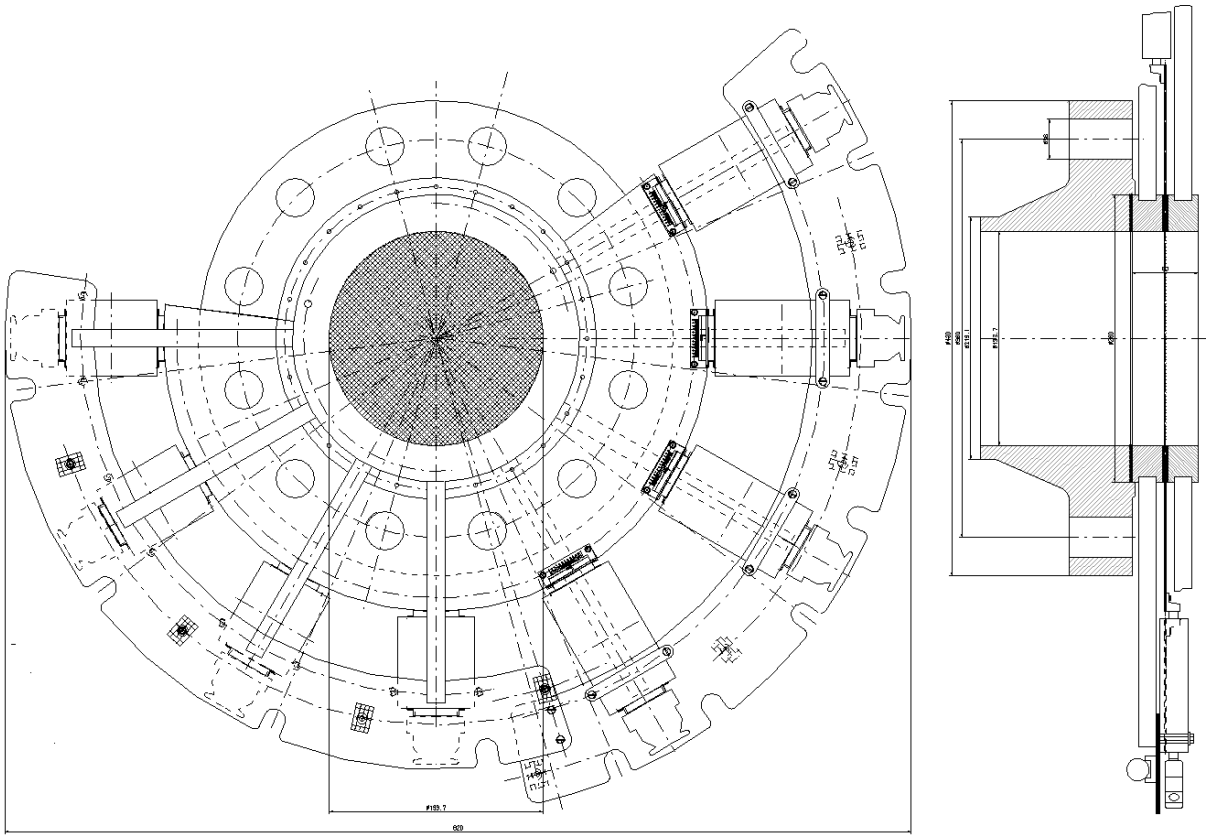

Fig. 4: Wire-mesh sensor for the DN200 test pipe with a measuring matrix of 64x64 points

Appearance of a wall peak in the gas fraction profiles

Gas fraction profiles were obtained from the high-resolution wire-mesh data by averaging over a measuring period of 10 s and over the circumference at different radial positions. Profiles measured for different superficial gas velocities at a constant liquid flow rate are shown in Fig. 5. In case of gas injection through the orifices of 6 mm, all distributions show a central peak. This was found for the entire studied range of superficial velocities ($0.0025 \leq J_G \leq 4.98$ m/s, $0.102 \leq J_L \leq 1.61$ m/s). The profiles show some distortions close to the centre of the pipe, which are still reflecting the rather complicated geometry of the gas injection device. They are probably caused by the wake generated by the gas injection head. In the large pipe a wall peak appeared only in tests with the gas injection geometry B (Fig. 5, right side). It vanishes when a certain superficial air velocity is exceeded.

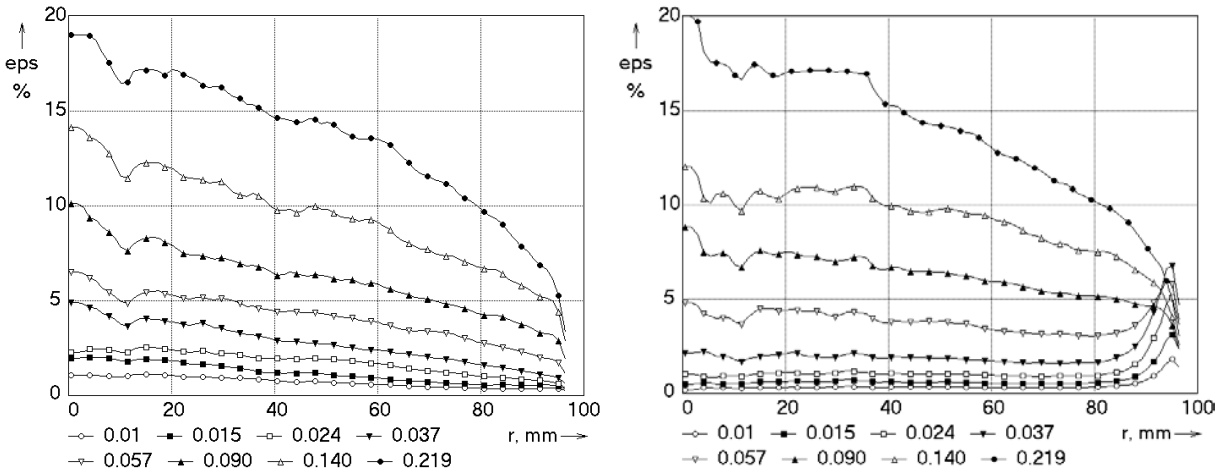

Injection geometry A (60 orifices, ∅ 6 mm) Injection geometry B (152 orifices, ∅ 0.8 mm)

Fig. 5: Radial gas fraction profiles in the 194.1 mm pipe J_L = 1,02 m/s, varied parameter: J_G, m/s, L/D = 39.2

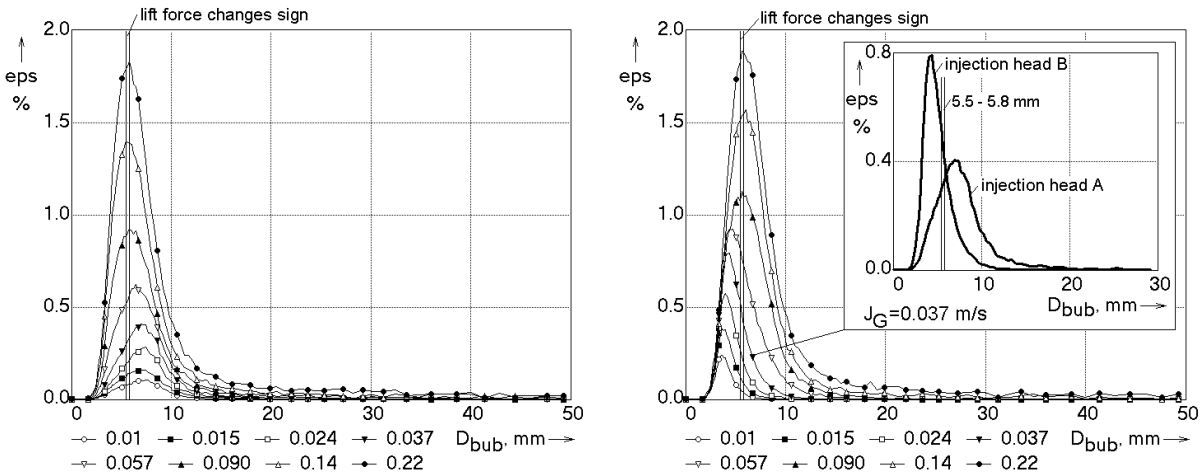

Injection geometry A (60 orifices, ∅ 6 mm) Injection geometry B (152 orifices, ∅ 0.8 mm)

Fig. 6: Bubble size distributions (part of gas fraction represented by a given bubble size class) in the 194.1 mm pipe, J_L = 1,02 m/s, varied parameter: J_G, m/s, L/D = 39.2

The measured bubble size distributions (for details see [3]) explain the reason for the wall peak appearance (Fig. 6): in this case most of the gas fraction is still found in bubbles with an equivalent diameter less than 5.5 - 5.8 mm, which is the characteristic diameter for the change of the sign of the lift force according to Tomiyama [4]. For bubbles smaller than this diameter, the lift force points towards the wall and is therefore responsible for the appearance of the wall peak.

As it can be seen from Fig. 6, the vanishing of the wall peak with growing superficial gas velocity corresponds with a shift of the peak in the bubble size distribution towards larger bubble diameters. In case of the gas injection head A, most of the bubbles is bigger than 5.5 - 5.8 mm, consequently a wall peak is not observed.

The wall peak disappears also with decreasing liquid velocity, as shown in Fig. 7. This is mainly due to the fact that the liquid velocity gradient decreases with decreasing liquid flow rate. As a consequence the lift force decreases, since it is proportional to the local gradient of the liquid velocity. At a certain point, the lift force is no more sufficient to create the wall peak. A second tendency is again connected with the bubble size. Since the gas fraction grows with decreasing superficial liquid velocity (at a constant air injection rate), the bubble size increases and more bubbles exceed the critical diameter for the lift force inverse.

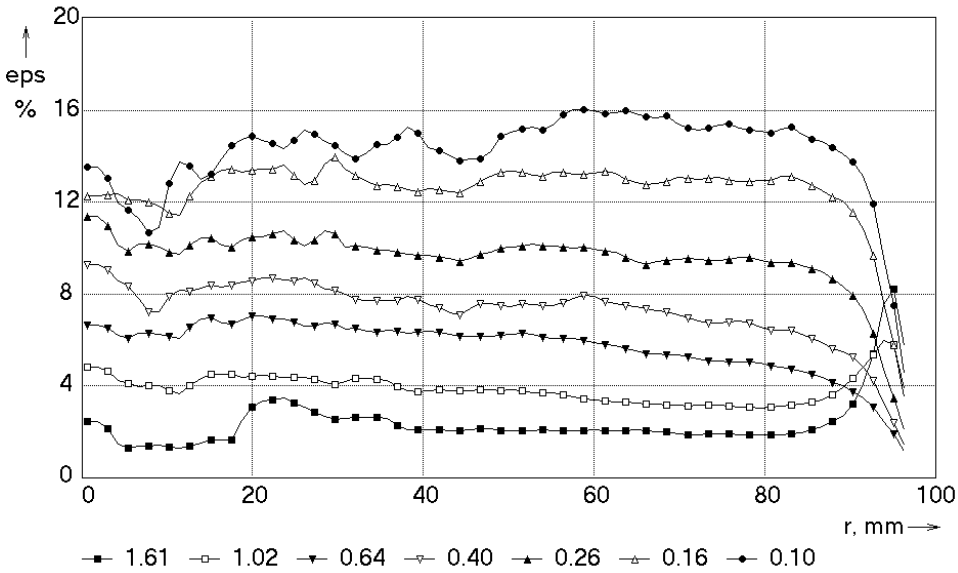

Fig. 7: Radial gas fraction profiles in the 194.1 mm pipe, J_G = 0.057 m/s varied parameter: J_L, m/s, injection geometry B (152 orifices, ∅0.8 mm)

The global situation is shown in Fig. 8, where the occurrence of the wall peak is mapped as a function of both gas and liquid superficial velocities. The wall peak is observed in a region that is bordered towards high superficial gas velocities and low superficial liquid velocities. This behaviour is well-known from studies of two-phase flow in small pipes. In earlier studies of our own [5] performed in a pipe of 51.2 mm at the test facility MTLoop, we found a wall peak, too, when the air was injected through 19 capillaries of 0.8 mm inner diameter (see also Fig. 8). However, the wall-peak region was significantly extended towards lower superficial liquid velocities. We believe that this is mainly explained by the fact that the liquid velocity gradient is greater in a small pipe compared to a large pipe with the same superficial liquid velocity.

J_L m/s \ J_G m/s	0.0025	0.0040	0.0062	0.0096	0.0151	0.0235	0.0368	0.0574	0.0898	0.140	0.219	0.342
1.611	9	20	31	42	53	64	75	86	97	108	119	130
1.017	8	19	30	41	52	63	74	85	96	107	118	129
0.641	7	18	29	40	51	62	73	84	95	106	117	128
0.405	6	17	28	39	50	61	72	83	94	105	116	127
0.255	5	16	27	38	49	60	71	82	93	104	115	126
0.161	4	15	26	37	48	59	70	81	92	103	114	125
0.102	3	14	25	36	47	58	69	80	91	102	113	124

wall peak in 51.2 and 194.1 mm pipe

wall peak in 51.2 mm pipe only

Numbers: Test points

Fig. 8: Flow map indicating the appearance of a wall peak in the radial gas fraction profiles for pipes of 51.2 mm and 194.1 mm diameter (gas injection orifices: ∅ 0.8 mm)

The data recorded by the wire-mesh sensors allow to obtain gas fraction profiles, which are decomposed according to bubble-size classes [6]. In Fig. 9 the result of such an analysis is given for a test point which is characterized by a wall peak when the injection head B was used (see Fig. 5). It is clearly visible that the wall peak is caused by the bubbles of an equivalent diameter below 5.5 mm (Fig. 9, right side). Bubbles bigger than 12.5 mm were hardly found in this test. At the same superficial velocities, injection head A produces a central gas fraction peak. Nevertheless, bubbles of an equivalent diameter of less than 5.5 mm still form a wall peak (Fig. 9, left side).

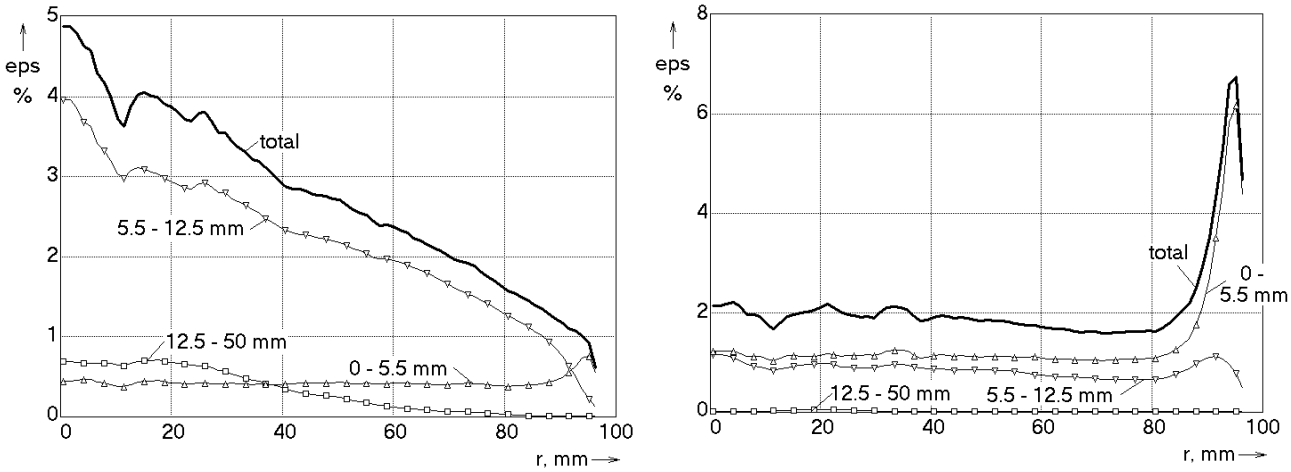

Injection geometry A (60 orifices, ∅ 6 mm)

Injection geometry B (152 orifices, ∅ 0.8 mm)

Fig. 9: Radial gas fraction profiles decomposed according to bubble-size classes D_{pipe} = 194.1 mm, pipe, J_L = 1.02 m/s, J_G = 0.037 m/s, L/D = 39.2, parameter: range of equivalent bubble diameters

Conclusions

Scaling effects were found in an upwards gas-liquid flow concerning the appearance of a wall peak in the radial gas fraction profiles. It was shown that the appearance of wall peaked gas fraction profiles depends on the primary bubble size, which is determined by the geometry of the gas injection device. Nevertheless, the region in which a wall peak is observed is shifted towards higher liquid velocities for large diameter pipes. The technique of obtaining bubble-size class resolved radial gas fraction profiles allowed to demonstrate, that there is a wall peak of small bubbles even in case of a missing wall peak in the total gas fraction profile.

Nomenclature

Sign	Unit	Denomination
D	m	diameter
eps	%	void fraction
J	m/s	superficial velocity
L	m	length
r	m	radius

Subscripts and abbreviations	
bub	bubble
G	gas (air)
DN	nominal diameter
L	liquid (water)
wms	wire-mesh sensor

References

[1] H.-M. Prasser, M. Beyer, A. Böttger, H. Carl, D. Lucas, A. Schaffrath, P. Schütz, F.-P. Weiss, J. Zschau, Influence of the pipe diameter on the structure of the gas-liquid interface in a vertical two-phase pipe flow, NURETH-10, Seoul, October 5-9, 2003, paper A00308.

[2] A. Ohnuki, H. Akimoto, Experimental study on transition of flow pattern and phase distribution in upward air-water two-phase flow along a large vertical pipe, International Journal of Multiphase Flow, 26(2000)367-386.

[3] H.-M. Prasser, D. Scholz, C. Zippe, Bubble size measurement using wire-mesh sensors, Flow Measurement and Instrumentation, 12/4, pp.299-312, 2001.

[4] Tomiyama, A., Struggle with computational bubble dynamics, in: Proceedings of Third International Conference on Multiphase Flow, ICMF 98, Lyon, France, June 8-12, 1998.

[5] A.-K. Krüssenberg, H.-M. Prasser, A. Schaffrath, A new criterion for bubble slug transition in vertical tubes, Kerntechnik, 65/1(2000), pp. 7-13.

[6] H.-M. Prasser, E. Krepper, D. Lucas, Evolution of the two-phase flow in a vertical tube - decomposition of gas fraction profiles according to bubble size classes using wire-mesh sensors, International Journal of Thermal Sciences, 41 (2002) 17-28.

Acknowledgement

The work is carried out in the frame of a current research project funded by the German Federal Ministry of Economics and Labour, project number 150 1265.
The authors expresses special gratitude to the technical team of the TOPFLOW facility, by name Klaus Lindner, Heiko Pietruske, Heiko Rußig, Marko Tamme und Steffen Weichelt.
Electronic equipment for wire-mesh sensors was developed in a close co-operation with TELETRONIC GmbH in Rossendorf (www.tz-rotech.de/teletronic/).